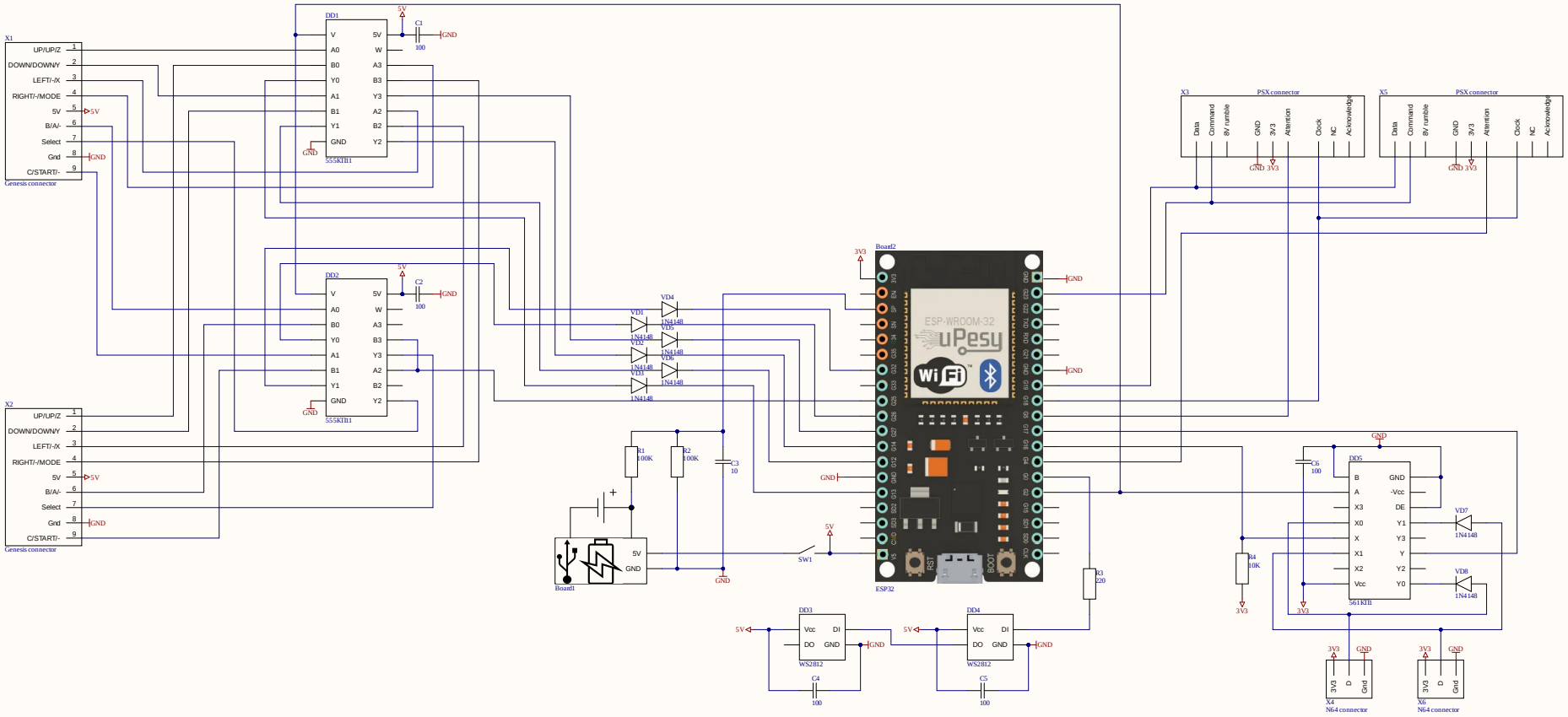
X1
UP/UP/Z
DOWN/DOWNY
LEFT/-/X
RIGHT/-/MODE
5V
B/A/-
Select
Gnd
C/START/-
Genesis connector
X2
Genesis connector
DD1
DD2
355KTI11
C1
C2
100
VD1
VD2
VD3
VD4
VD5
VD6
1N4148
R1
100K
R2
100K
C3
10
Board1
SW1
Board2
ESP32
R3
220
DD3
DD4
WS2812
C4
C5
X3
PSX connector
Data
Command
8V rumble
GND
3V3
Attention
Clock
NC
Acknowledge
X5
DD5
561KTB
C6
R4
10K
VD7
VD8
X4
N64 connector
X6
N64 connector